# Exploded view

## Explodierte Ansicht | Dessin technique | Rozkres
## Vista en despiece ordenado

DNR 600 S

Exploded view 1/1

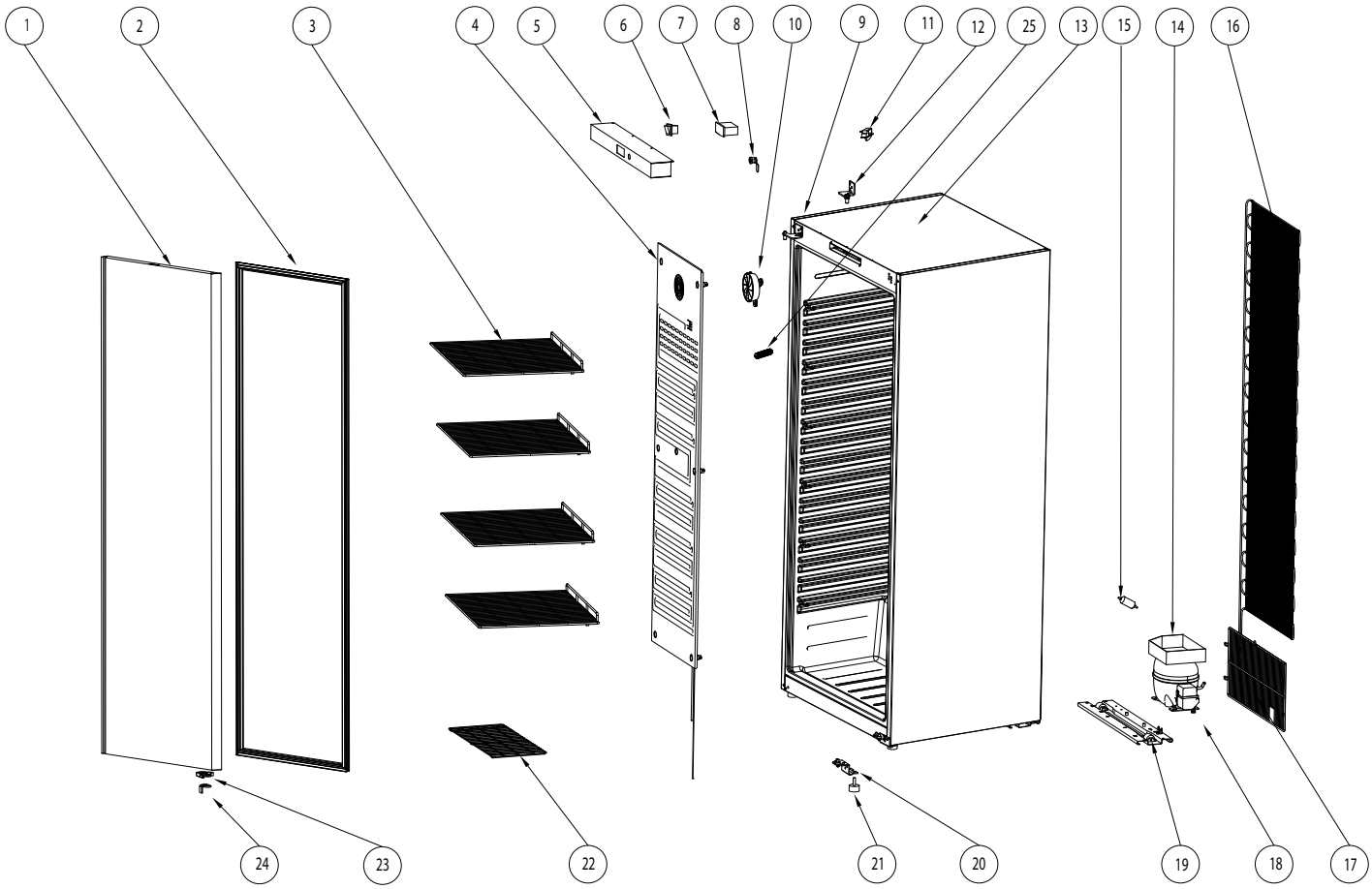

# Exploded view

## Explodierte Ansicht | Dessin technique | Rozkres
## Vista en despiece ordenado

DNR 600 S

| ARTICLE | NUMBER | POSITION |
|---|---|---|
| Door | WR60S.01A | 1 |
| Gasket | WR60.02 | 2 |
| Shelf | WR60.03A | 3 |
| Evaporator | WR60.04 | 4 |
| Front Panel | WR60S.05A | 5 |
| Main Swich | GN1100TN.30 | 6 |
| Controller | GN1100TN.29 | 7 |
| Lock | WR40.06 | 8 |
| Left Top Hinge | WR40.07A | 9 |
| Evaporator Fan | WR40.08 | 10 |
| Fan Switch | WR40.09 | 11 |
| Right Top Hinge | WR40.10A | 12 |
| Body | WR60S.06 | 13 |
| Water Tray | WR60.12 | 14 |
| Filter Drier | WR60.13 | 15 |
| Condensor | WR60.07 | 16 |
| Back Net | WR60.08 | 17 |
| Compressor Unit | WR60.10A | 18 |
| Compressor Broad | WR60.09 | 19 |
| Bottom Hinge | WR40.11A | 20 |
| Adjustable Feet | S900 STD.38 | 21 |
| Small Shelf | WR60.11 | 22 |
| Door Opening Stop | WR40.12 | 23 |
| Door Closing Stop | WR40.13 | 24 |
| Sensor Cover | WR60.25 | 25 |
| | | |
| | | |
| | | |
| | | |
| | | |
| | | |
| | | |
| | | |
| | | |
| | | |
| | | |